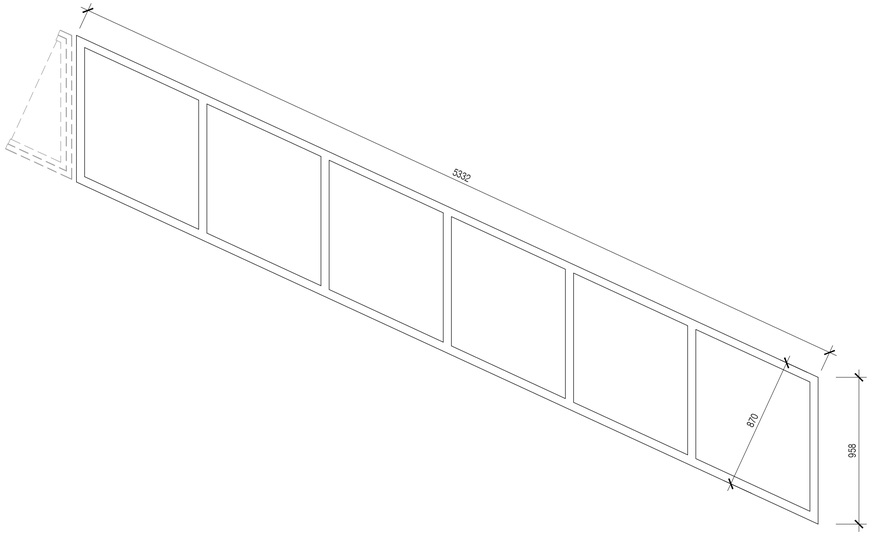

Assembly Type 22

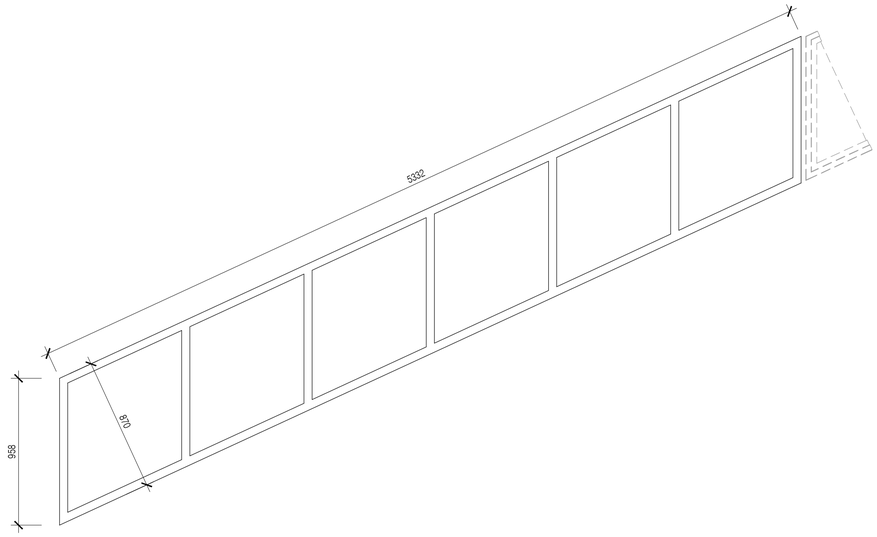

Assembly Type 23

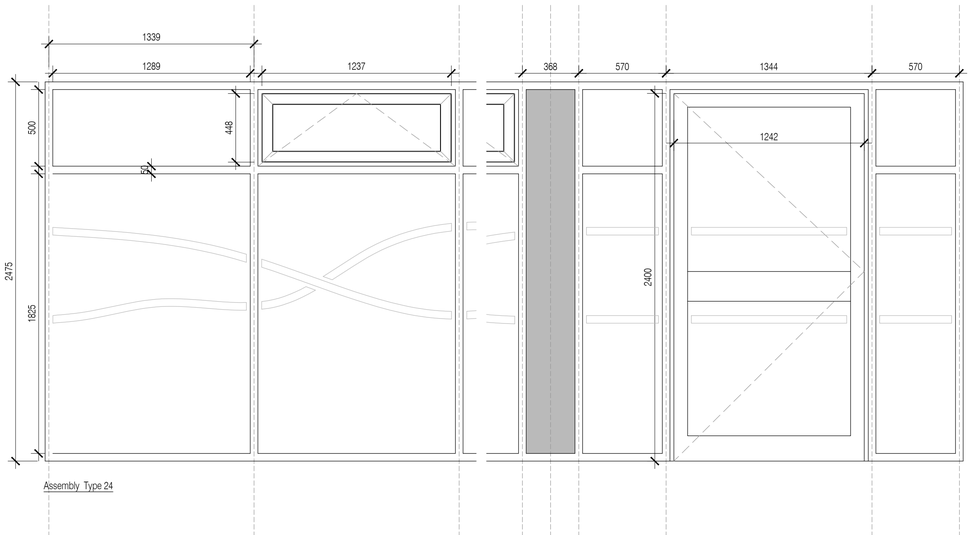

Assembly Type 24

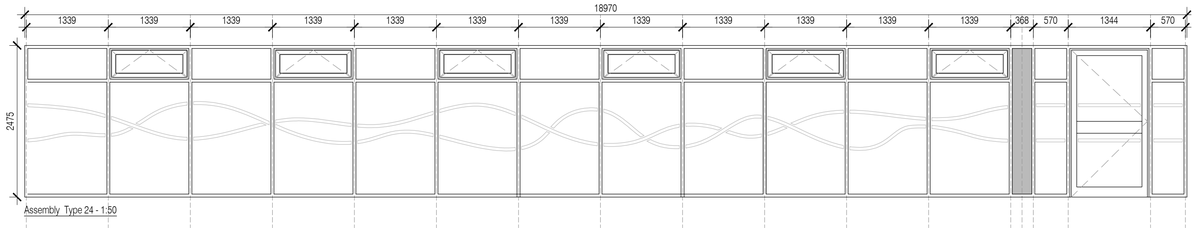

Assembly Type 24 - 1:50

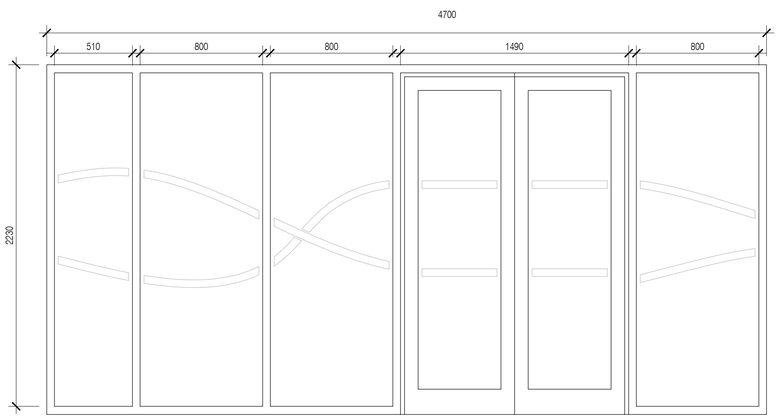

Assembly Type 25

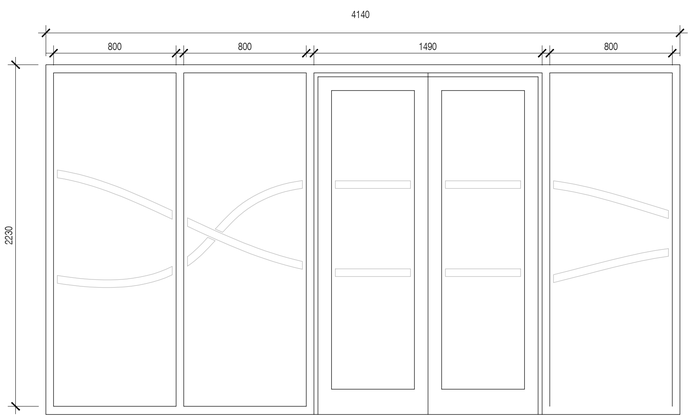

Assembly Type 26

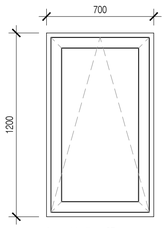

Assembly Type 27

NOTES: Do not scale this drawing. All dimensions to be checked on site prior to commencement or manufacture.

Key Plan
(nts)

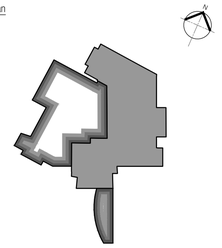

ISSUED FOR CONSTRUCTION

Rev	Date	By	Chk	Comment
C3	28.01.14	CH	AC	Manifestations adjusted
C2	27.01.14	CH	AC	Manifestations adjusted
C1	03.07.13	RKC	JAS	Issued for CONSTRUCTION

BRINGING IDEAS TO LIFE

FRANKHAM

Frankham Consultancy Group Limited
21 Perrymount Road
Haywards Heath RH16 3TP
t 01444 444900 f 01444 455642
enquire@frankham.com
www.frankham.com

Client
Ealing
www.ealing.gov.uk

Project Title
Dominion Arts Centre
Southall
London

Drawing Title
Window Elevations
4 of 4

Drawn by:	Scale:	Date:
RKC	1:20@A1	24.03.13
Designed by:	Checked by:	Approved by:
FCG	-	-

File Ref.: X:\2000\00224970 - LB EALING - DOMINION ARTS CENTRE\ARCH\300_399_ELEVATIONS\224970-A-363.DWG - 2008/11/13/4234 20.06.11 13:43:37

Drawing No. 224970-A-363
Rev. C3