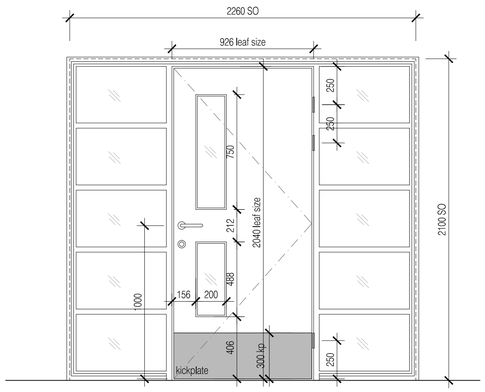


Assembly Elevation Type A

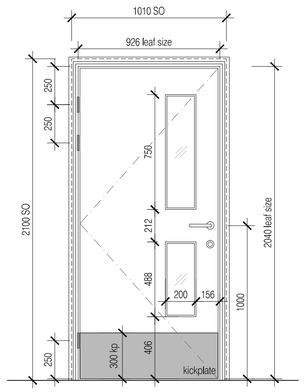


Assembly Elevation Type B

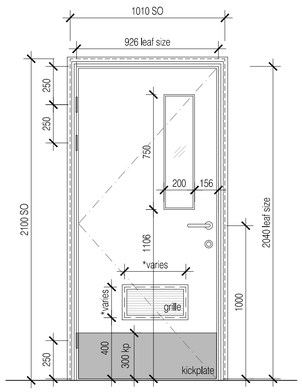


Assembly Elevation Type C

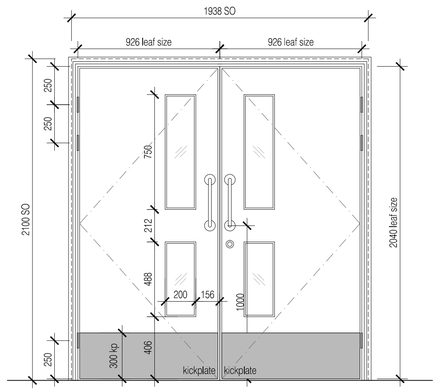


Assembly Elevation Type D

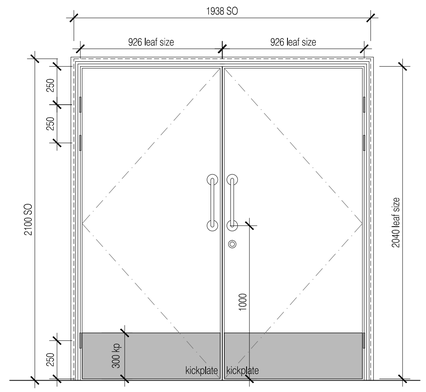


Assembly Elevation Type E

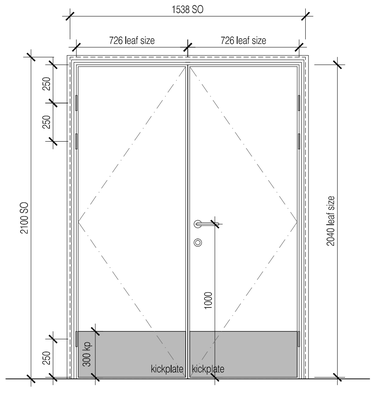


Assembly Elevation Type F

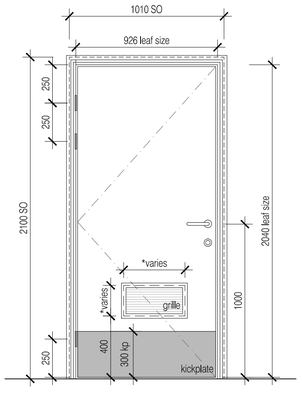


Assembly Elevation Type G

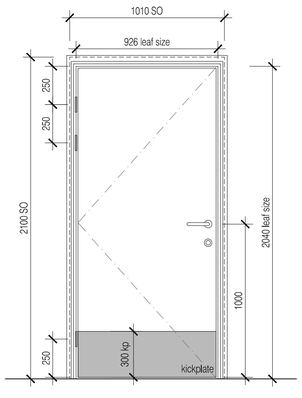


Assembly Elevation Type H

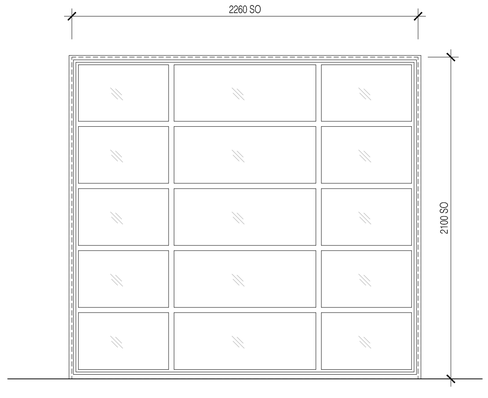


Assembly Elevation Type J

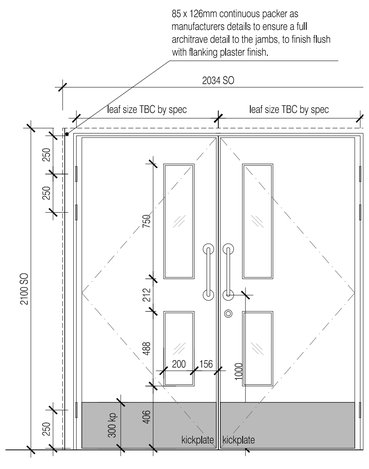


Assembly Elevation Type K

NOTES: Do not scale this drawing. All dimensions to be checked on site prior to commencement or manufacture.

NB: All information based on supplied third party survey information. All discrepancies to be reported to FCG immediately upon discovery.

Notes

Refer also to the following door schedules:

- 611869-A-610 - Existing Infants Block
- 611869-A-611 - New Infants Block
- 611869-A-612 - Existing Juniors Building

Refer to NBS specification sections L20 + L40.

Refer also to detail drawings 611869-A-500 Series

Refer to 'John Planck Ltd' Ironmongery Schedules

ISSUED FOR CONSTRUCTION

| Rev | Date | By | Chk | Comment |
|---|---|---|---|---|
| C2 | 04.06.13 | DOD | JAS | New door added |
| C1 | 07.03.13 | ES | JAS | Issued for Construction |
| A2 | 09.10.12 | GD | JAS | Issued for Stage F approval. |
| A1 | 11.07.12 | SC | JAS | First formal issue. Stage E Issue |

25 YEARS OF BRINGING IDEAS TO LIFE

FRANKHAM

Frankham Consultancy Group Limited
Frankham House Wootton Business Park
Besselsleigh Road Wootton Abingdon
Oxfordshire OX13 6FD
T 01865 322500 F 01865 327393
E enquire@frankham.com
www.frankham.com

ANNIVERSARY 25 YEARS 1982 - 2007

Client
Leadbitter CONSTRUCTION

Project Title
Whitehall Junior & Infant School
Refurbishment, Extension and New Build
Cowley Road
London Borough of Hillingdon

Drawing Title
New Infants Block
Door & Screen Elevations

| Drawn by: | Scale: | Date: |
|---|---|---|
| RKC | 1:20@A1 | 11.07.12 |
| Designed by: | Checked by: | Approved by: |
| FCG | JAS | AC |

File Ref.: X:\600000\611869 - HILLINGDON SCHOOLS - WHITEHALL REDESIGN\ARCH\300_399_ELEVATIONS\611869-A-370.DWG - REV-C2-14042410462 14.04.24:10:46:53

Drawing No. 611869-A-370 Rev. C2