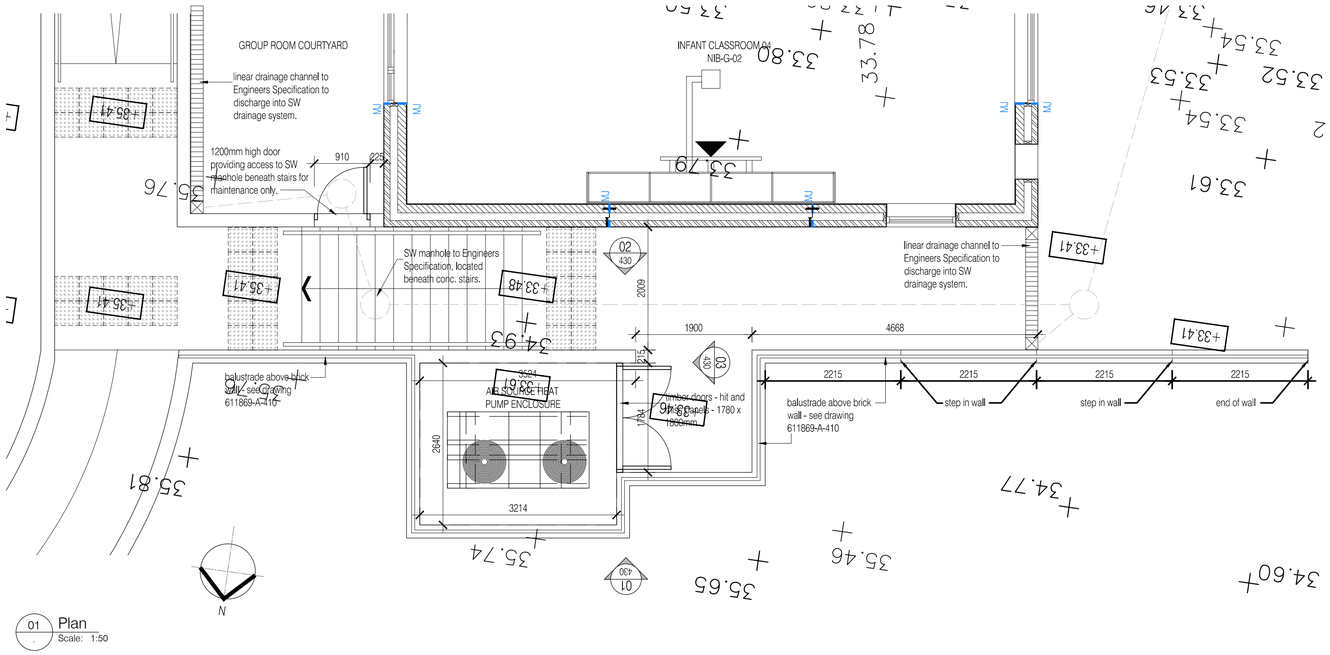

01 Plan
Scale: 1:50

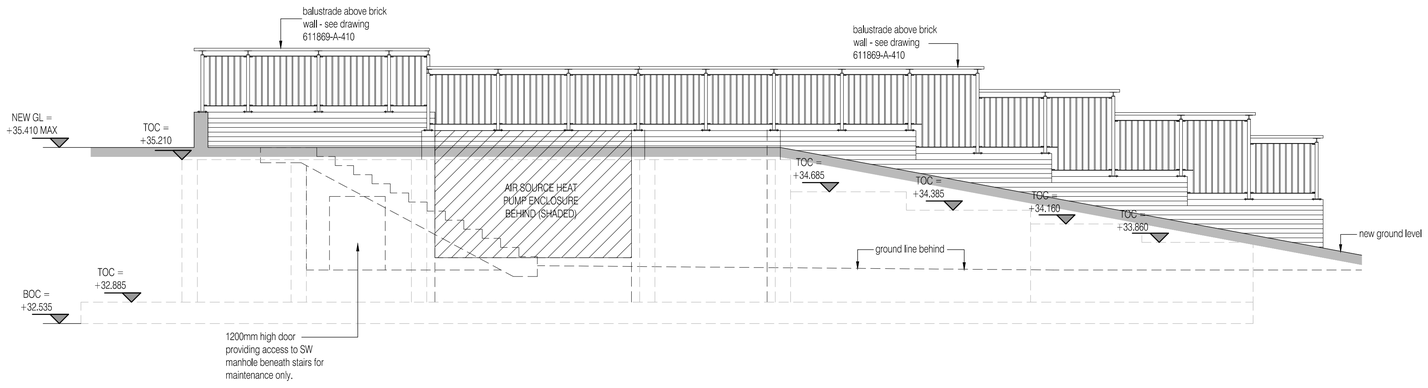

02 Elevation 1 - Looking South
Scale: 1:50

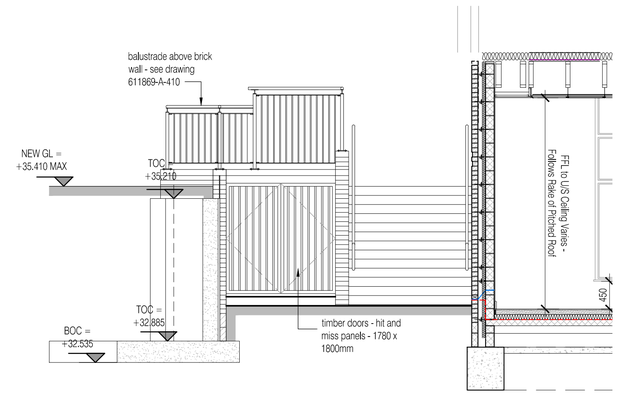

04 Elevation 3 - Looking East
Scale: 1:50

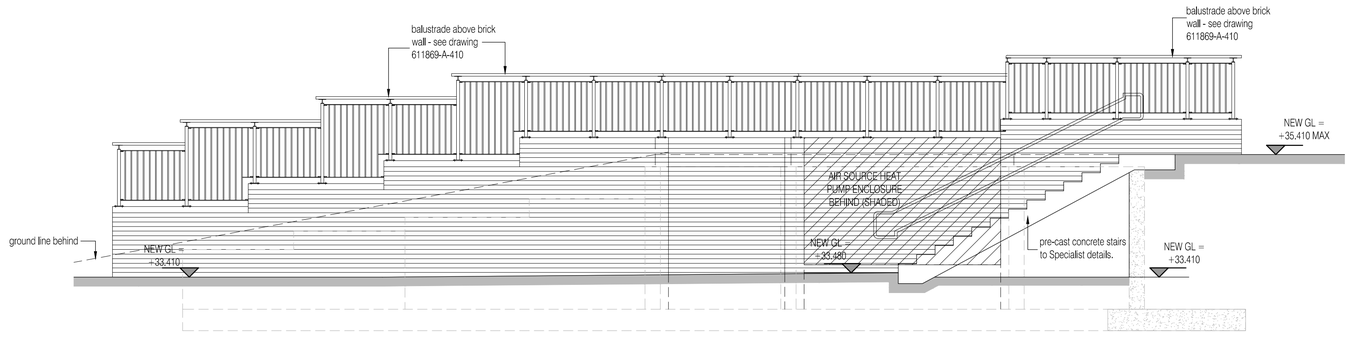

03 Elevation 2 - Looking North
Scale: 1:50

NOTES: Do not scale this drawing. All dimensions to be checked on site prior to commencement or manufacture.

NB: All information based on supplied third party survey information. All discrepancies to be reported to FCG immediately upon discovery.

Drawing to be read in conjunction with Thomason's (Structural Engineer's) design and specification

ISSUED FOR CONSTRUCTION

Rev	Date	By	Chk	Comment
C1	15.02.13	ES	JAS	Issued for Construction
A3	09.10.12	SC	JAS	Issued for Stage F Approval
A2	24.08.12	SC	JAS	Wall and Balustrade at Top of Stairs Raised
A1	23.08.12	SC	JAS	Stage E Issue

25 YEARS OF BRINGING IDEAS TO LIFE

FRANKHAM

Frankham Consultancy Group Limited
Frankham House Wootton Business Park
Besselsleigh Road Wootton Abingdon
Oxfordshire OX13 6FD
T 01865 322500 F 01865 327393
E enquire@frankham.com
www.frankham.com

ANNIVERSARY 25 YEARS 1982 - 2007

Client
Leadbitter CONSTRUCTION

Project Title
Whitehall Junior & Infant School
Refurbishment, Extension and New Build
Cowley Road
London Borough of Hillingdon

Drawing Title
New Infant Block
Air Source Heat Pump Enclosure
General Details

Drawn by:	Scale:	Date:
RKC	1:50@A1	23.08.12
Designed by:	Checked by:	Approved by:
FCG	JAS	AC

File Ref.: X:\00000\611869 - HILLINGDON SCHOOLS - WHITEHALL REDESIGN\ARCH\400_499_DETAILS_EXTERNAL WORKS\611869-A-420.DWG - REV-C1-14042\104743 14:04:24:10:47:47

Drawing No. 611869-A-420 Rev. C1